Metal Garden Shed

OWNER'S MANUAL

Instructions for Assembly

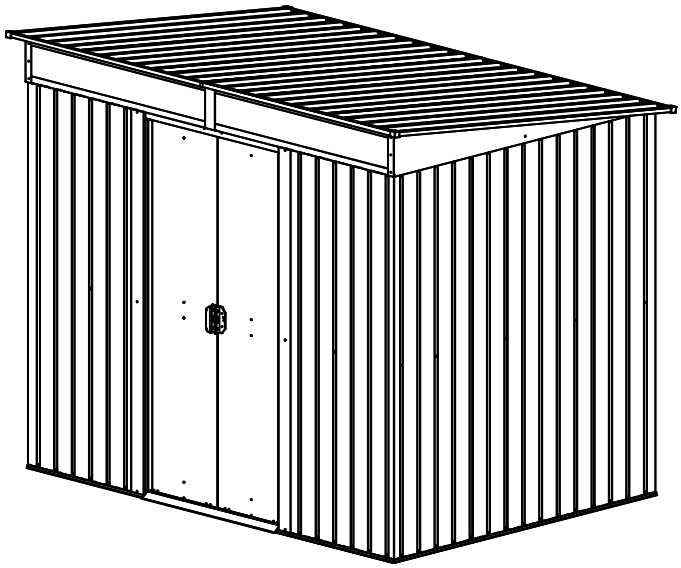

SD-PS68-H170

Requires two people and takes 1-2 hours for Installation.

Quick & Easy Assembly

Ridge Reinforced Walls

Available in Various Sizes

BEFORE YOU START

Owner's Manual

Prior to installation, it is important that you contact your local government authority to determine if building approval is required. Study and understand this owner's manual. Important information and helpful tips will make your construction easier and more enjoyable.

Assembly instructions

Instructions are supplied in this manual and contain all appropriate information for your building model. Review all instructions before you begin. During assembly, follow the step sequence carefully for correct results .

Parts

Check to be sure that you have all the necessary parts for the building.

Separate contents of the carton by the part number while reviewing parts list.

Familiarize yourself with the hardware and fasteners for easier use during construction. These are packaged within the carton. Note that extra fasteners have been supplied for your convenience.

TOOLS MAY REQUIRED

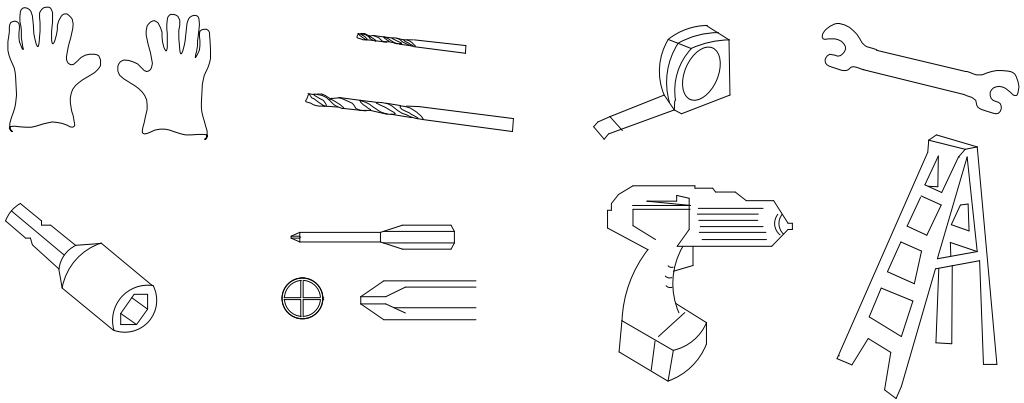

Use heavy duty gloves when handling steel sheets and flashing

PLAN AHEAD

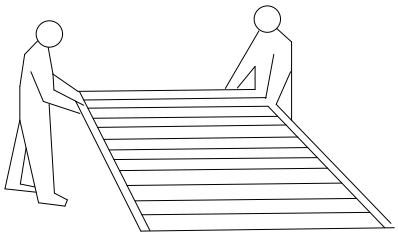

Watch the weather:

Please be sure the day you select for installation is dry and calm.

DO NOT attempt to assemble your shed in windy weather because of risk of damage to panels, or personal injury. Be careful of wet or muddy ground.

Teamwork:

Whenever possible, two or more people should work together to assemble the building. One person can position parts or panels while the other is able to handle the fasteners and the tools.

PLAN AHEAD

Site Selection

- Avoid overhanging trees as much as possible as leaves will make regular cleaning necessary and broken branches are a potential hazard.
- Small trees,bushes or fences nearby can be helpful,acting as a wind break.

Site Preparation

The site must be prepared so that the base of the shed is level all round and checking with a spirit level is required.

The base can be constructed by treated timber or concrete,in order to stop the moisture getting into the shed.**The shed is not designed to be built onto lawn directly.**Also the ground will get muddy during rainy days.

If a concrete pad is made,it is important that this slopes towards the edges to prevent water ingress.
Time must be allowed for any concrete or cement to dry before building the shed on top.

Bases can also be constructed from bricks,blocks,or mounted on a concrete pad.
The bricks or blocks should be cemented onto firm and level concrete footings and the greenhouse frame drilled and screwed to the base.

IMPORTANT NOTES:

- Find someone to help you:it is much easier with someone to hold parts,pass tools ect.Also some steps require two people to lift structures together.This is not very heavy work so would suit most able-bodied people.
- Allow plenty of time:rushing often causes errors and the re-doing of incorrect assemblies.If you have never built a shed before,it can take most of a day to carefully complete the construction.
- Have the right tools to hand.
- Safety clothing as recommended in the 'Tools' section.
- Ideally lat out the parts and check that all are present before commencing construction.Lay on cloths or plastic sheets if there is any risk of scratching the parts.
- Tighten all nuts carefully,being sure not to miss any.Check the frame is square and using a spirit level to check that it is upright.

NO.	PART	Qty.
1	1608mm	2
3L	823mm	1
3R	823mm	1
4L	1169mm	1
4R	1169mm	1
5	765mm	1
6	876mm	1
7	1110mm	1
8	1110mm	1
9	1574mm	1
10L	1131mm	1
10R	1131mm	1
11	1574mm	1
11-1	867mm	1
11-2	1507mm	1
B1	97mm	2

NO.	PART	Qty.
15	1722mm	2
17L	1195mm	2
17R	1195mm	2
20	411mm	6
21L		1
21R		1
25L	1720mm	1
25R	1720mm	1
C1	1315mm	1
C2	1315mm	1
C3	1140mm	1
C4	1140mm	1
C5	276mm	1
C6	164mm	1
C7	245mm	2

NO.	PART	Qty.
P1	1720mm	9
P2	1720mm	4
P3	1720mm	3
P6	1720mm	2
P4L	1722mm	2
P4R	1722mm	2
P5	1722mm	2
P0	1102mm	2

NO.	PART	Qty.
D1	1710X415mm	1
D2	1710X415mm	1

NO.	PART	Qty.
G2		4
GD		4
GB		2
GC		4
F1		260
F2		50
F3		8
S2		120
S3		240

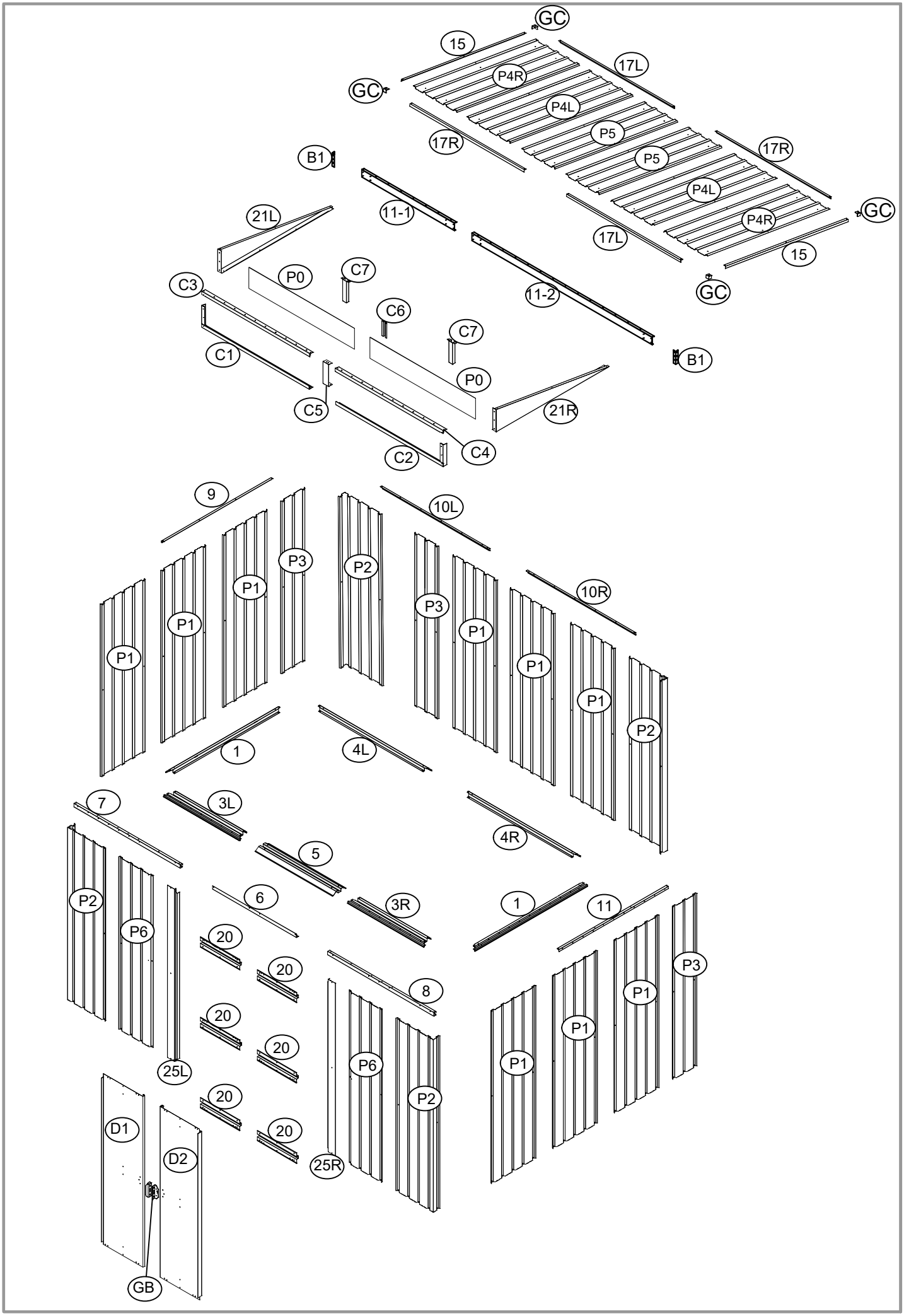
GC
15
17L
P4R
GC
P4L
P5
17R
17R
B1
P5
P4L
GC
21L
11-1
P4R
17L
15
C3
P0
C7
GC
11-2
C6
C7
C1
B1
P0
C5
21R
C4
C2
9
10L
P3
P2
P1
10R
P3
P1
P1
P1
P1
P1
P2
1
4L
7
3L
4R
5
P2
6
3R
1
11
P6
20
20
8
P3
P1
20
P1
20
P6
P1
25L
P2
20
D1
20
D2
25R
GB

NO.	PART	Qty.
4L		1
4R		1

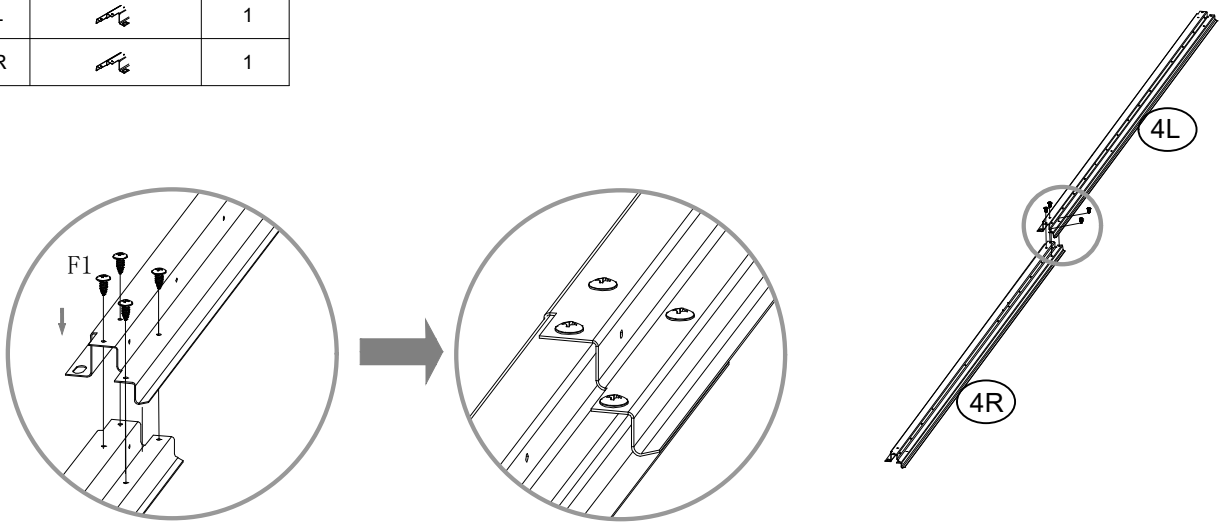

NO.	PART	Qty.
1		2

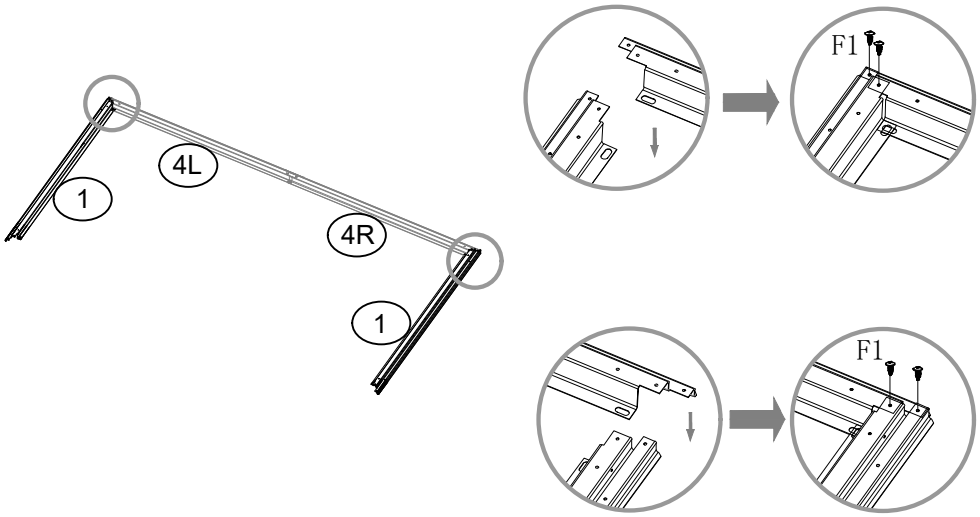

NO.	PART	Qty.
3L		1
3R		1

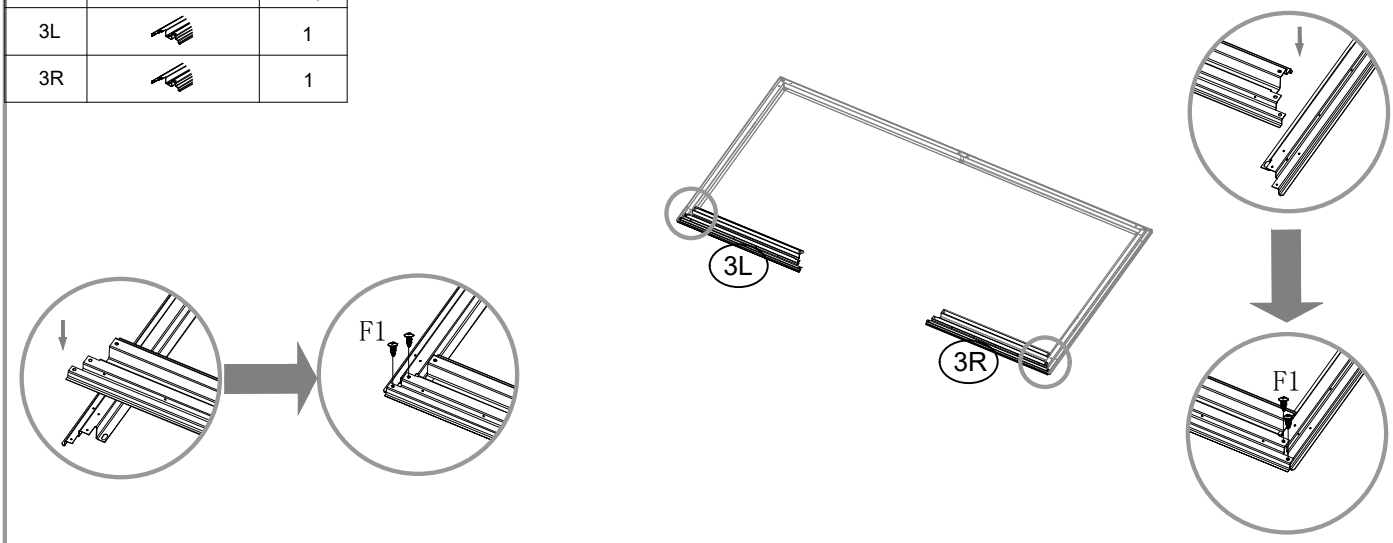

NO.	PART	Qty.
5		1

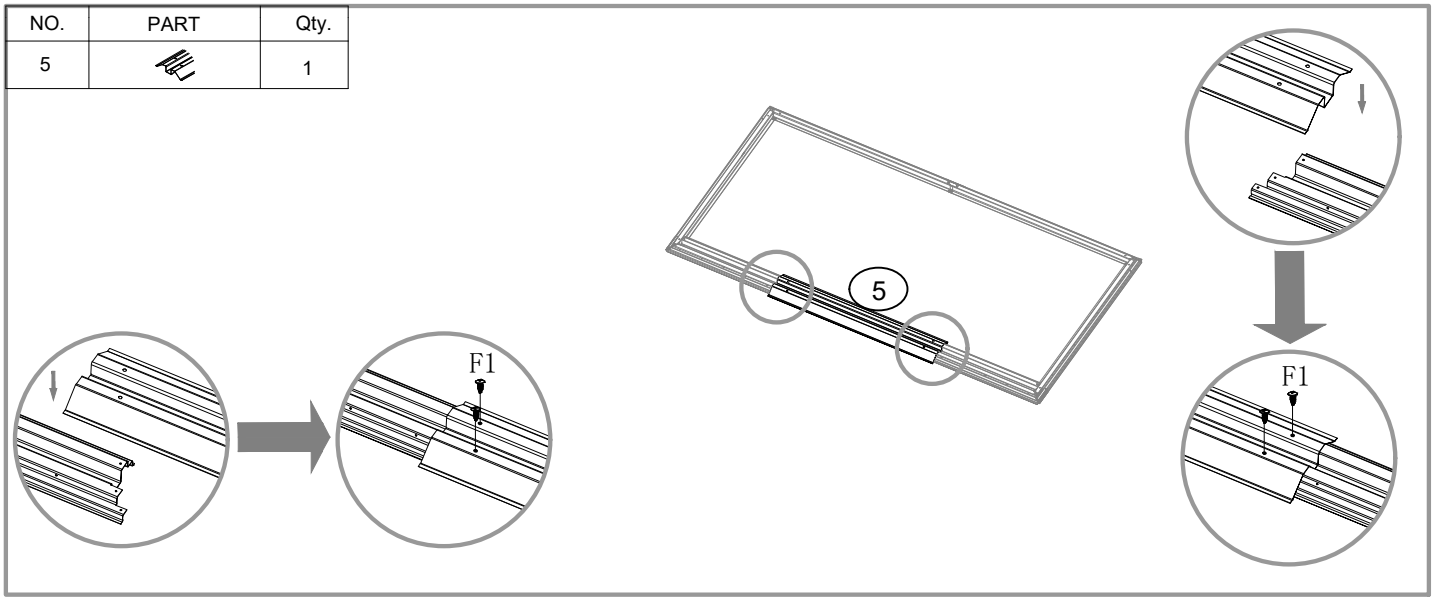

1、When diagonal measurements are equal,the frame is square.

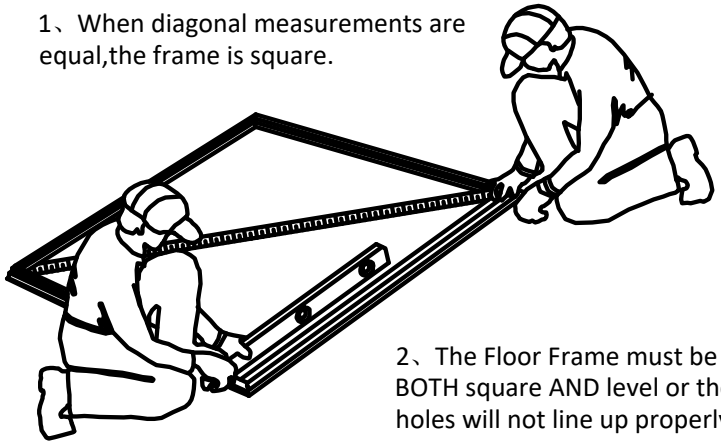

2、The Floor Frame must be BOTH square AND level or the holes will not line up properly.

NO.	PART	Qty.
P2		1
P1		1

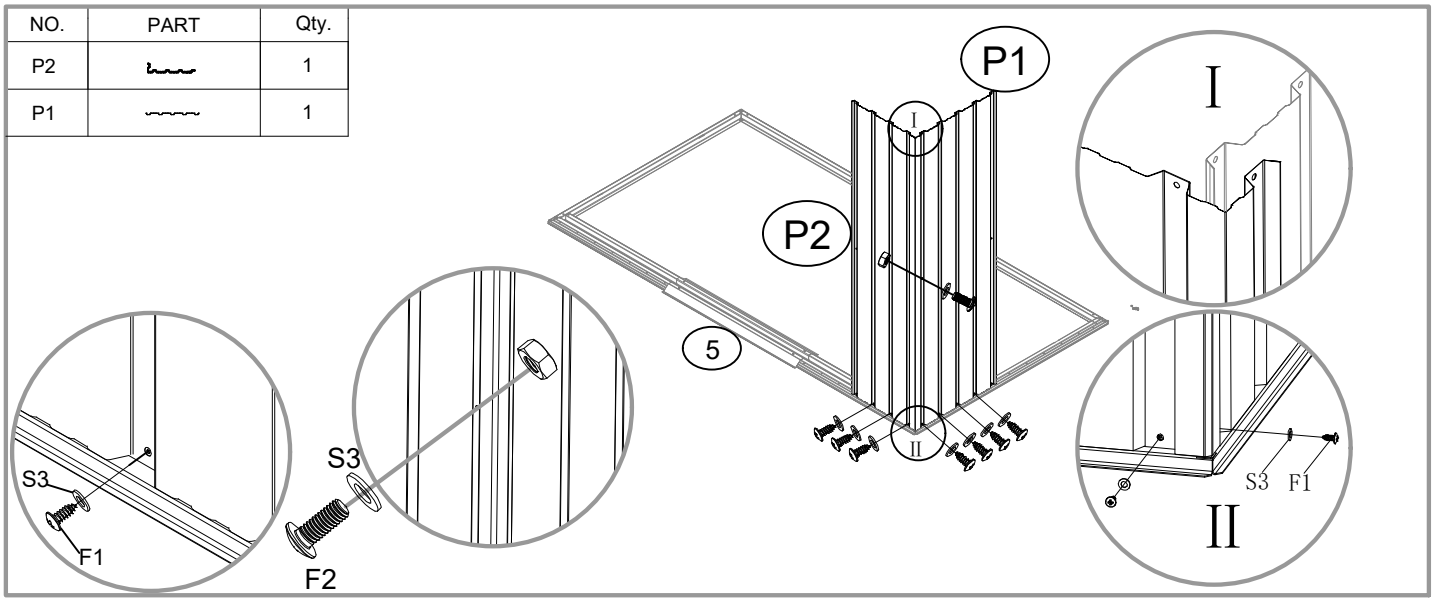

NO.	PART	Qty.
P2		1
P3		1

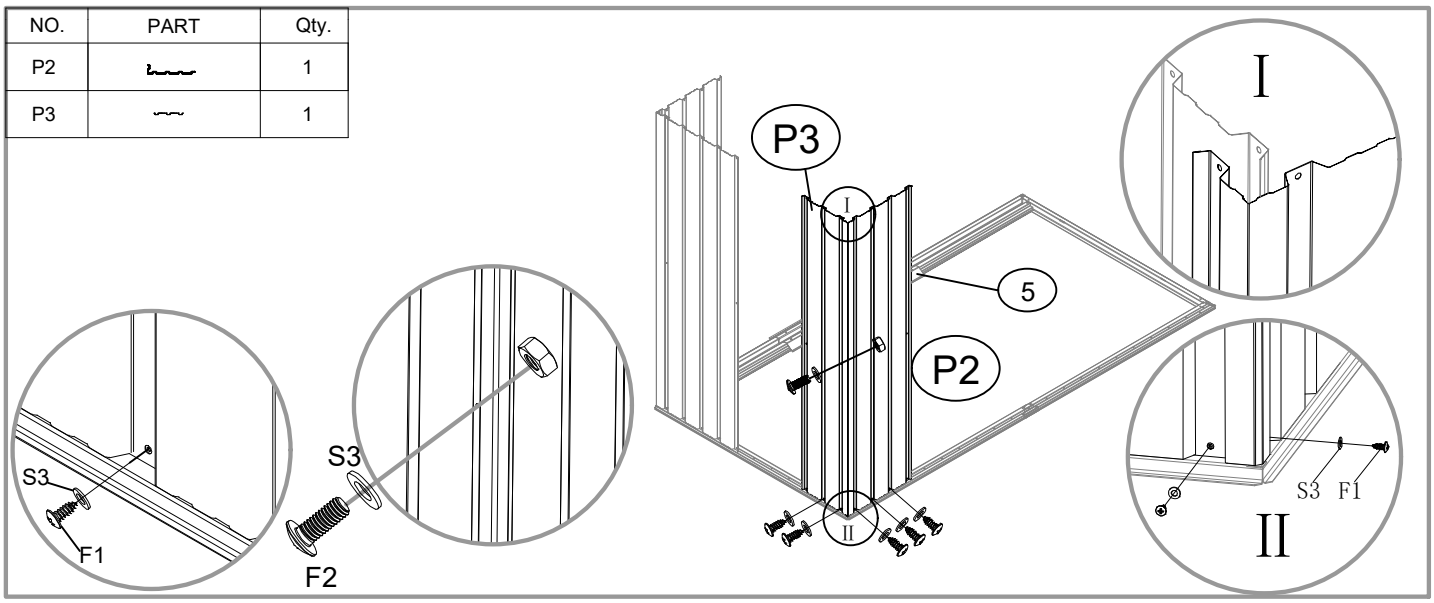

NO.	PART	Qty.
P2		1
P3		1

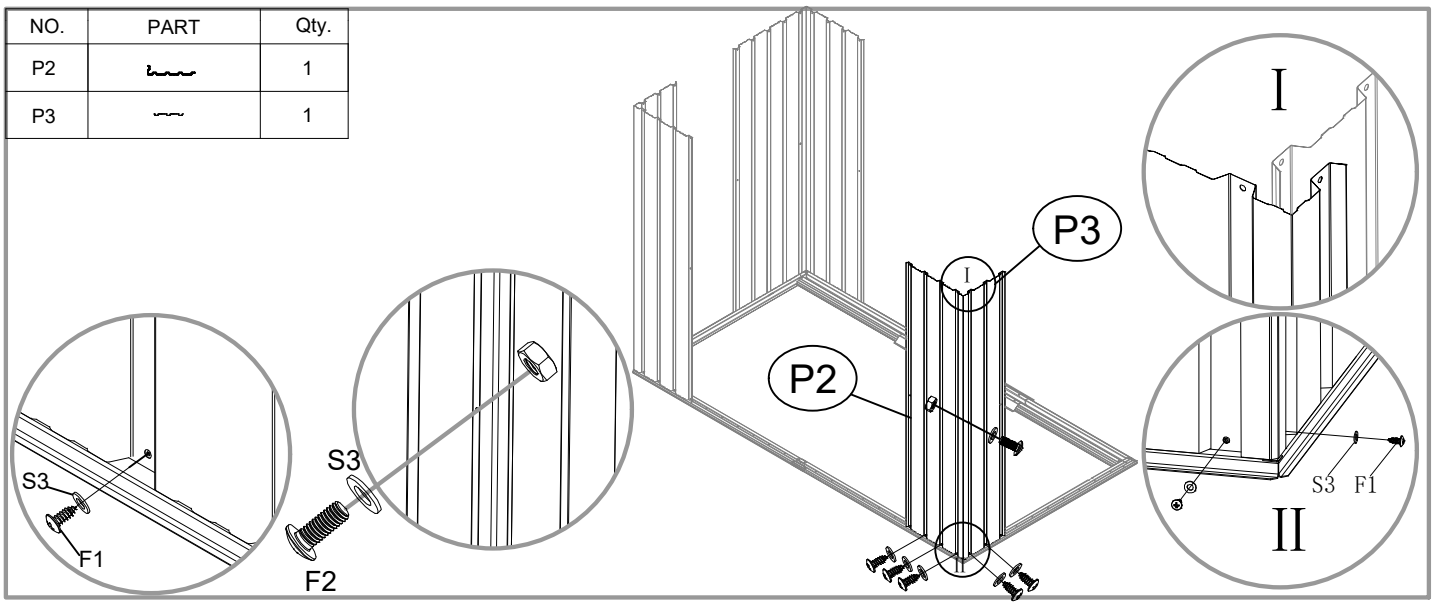

NO.	PART	Qty.
P2		1
P1		1

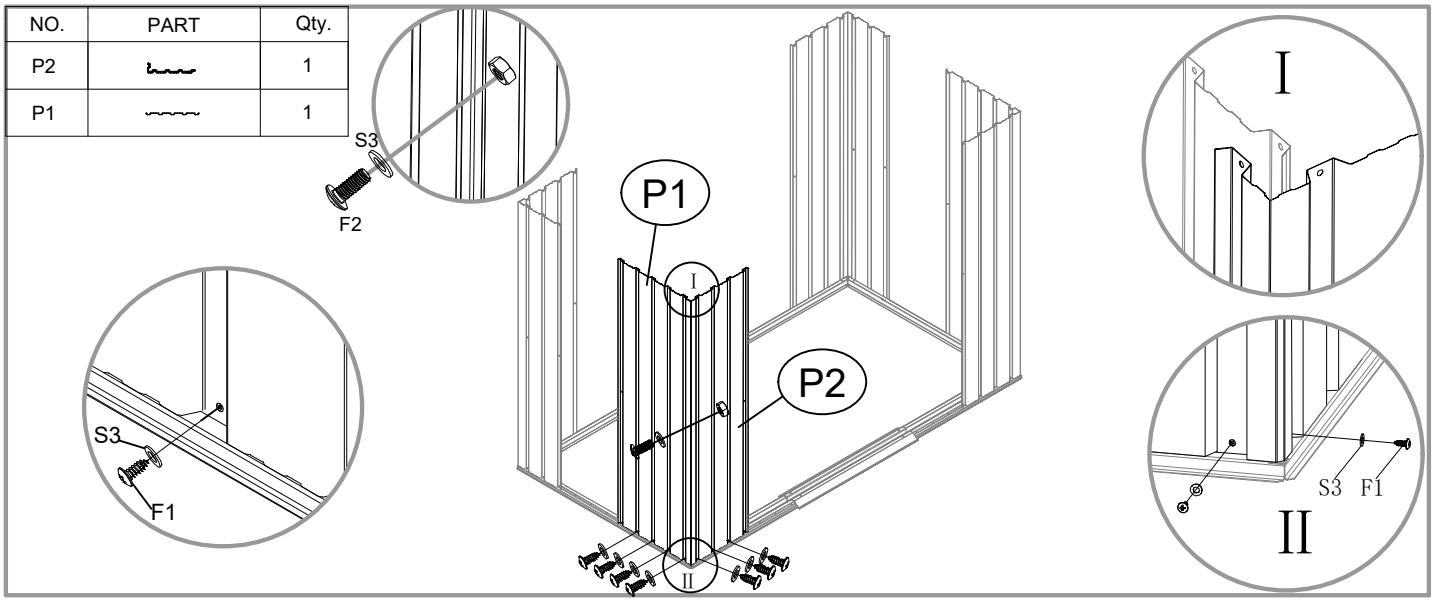

NO.	PART	Qty.
P6		2

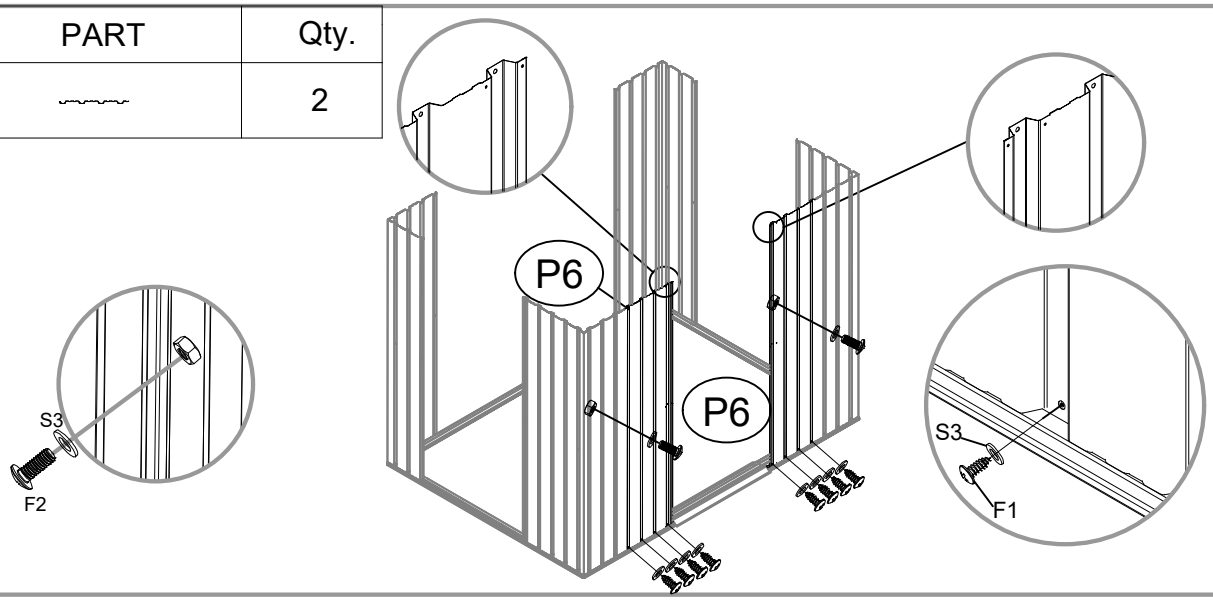

NO.	PART	Qty.
10L		1
10R		1

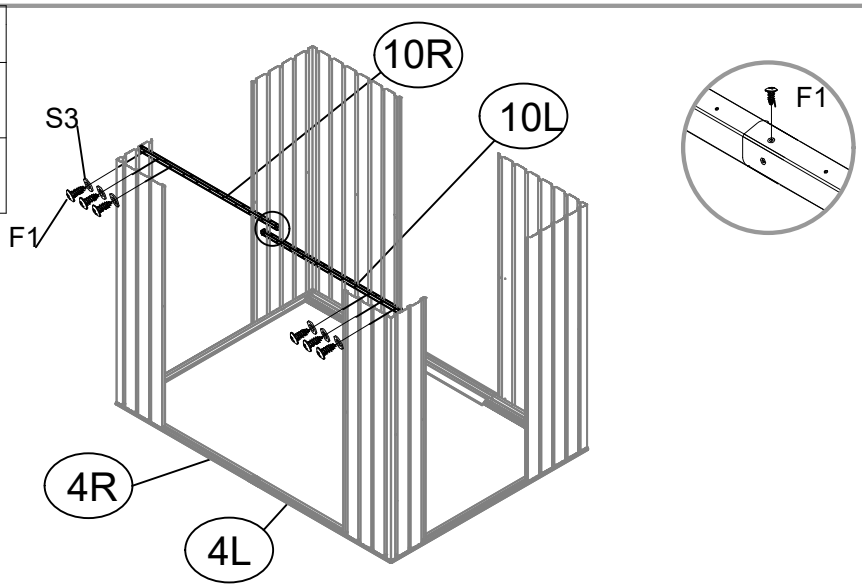

NO.	PART	Qty.
11		1
21R		1

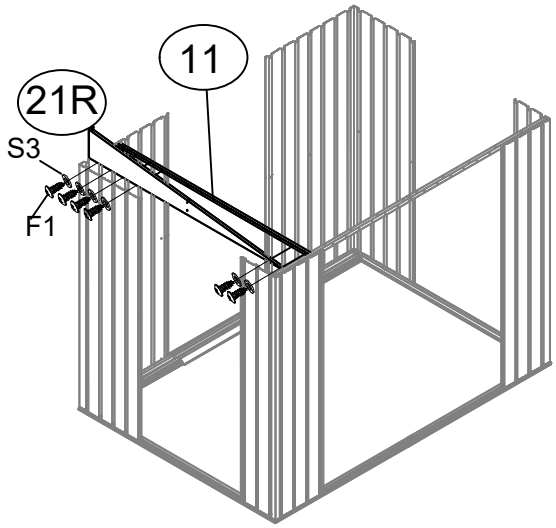

NO.	PART	Qty.
9		1
21L		1

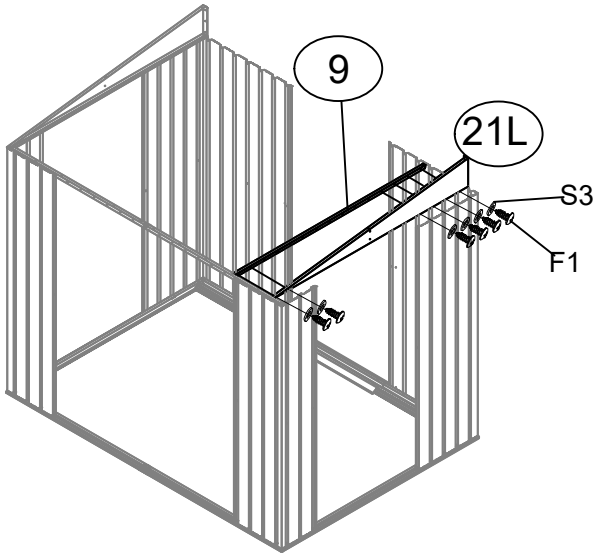

NO.	PART	Qty.
7		1
8		1
G2		4
6		1

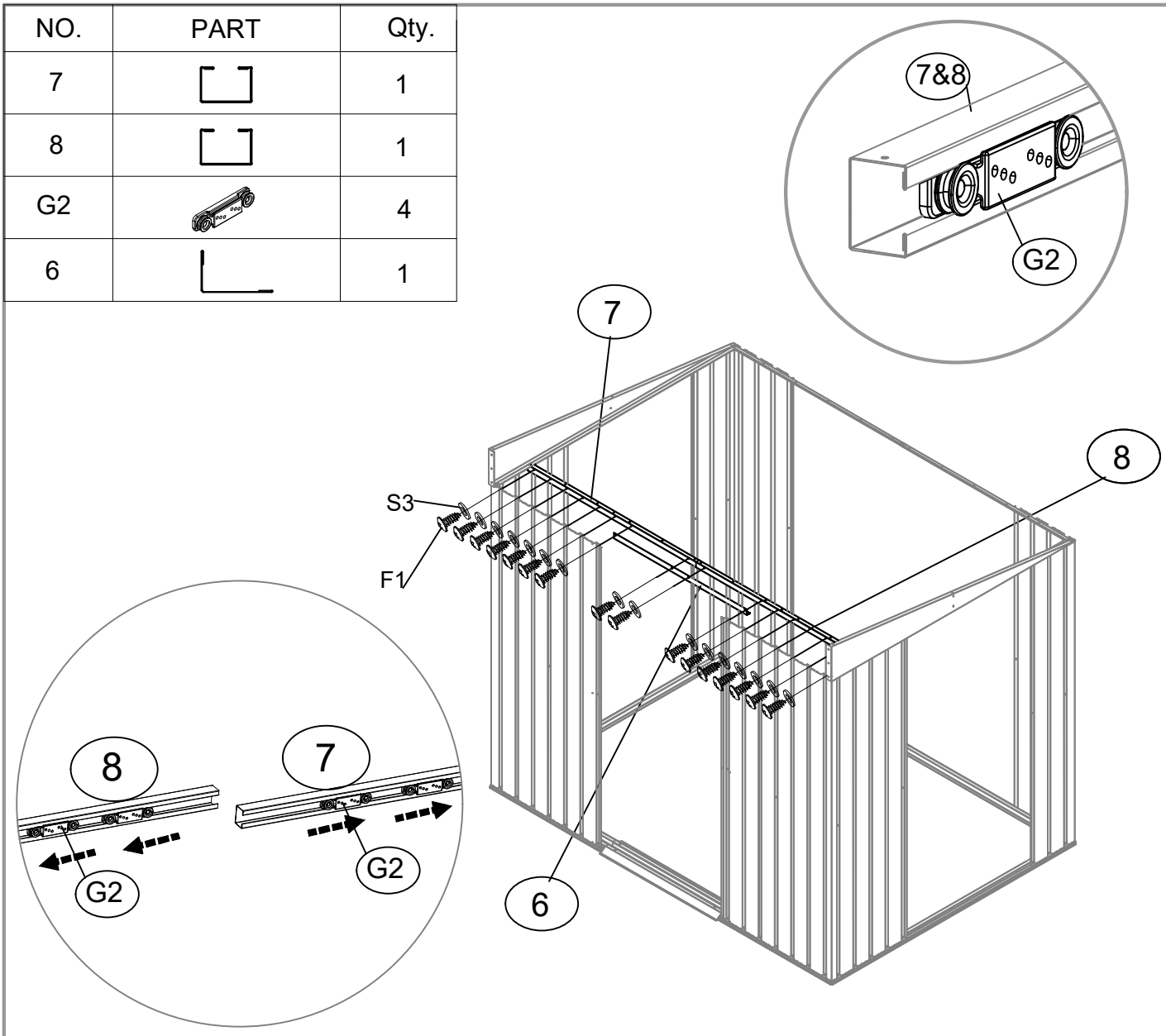

NO.	PART	Qty.
25L		1
25R		1

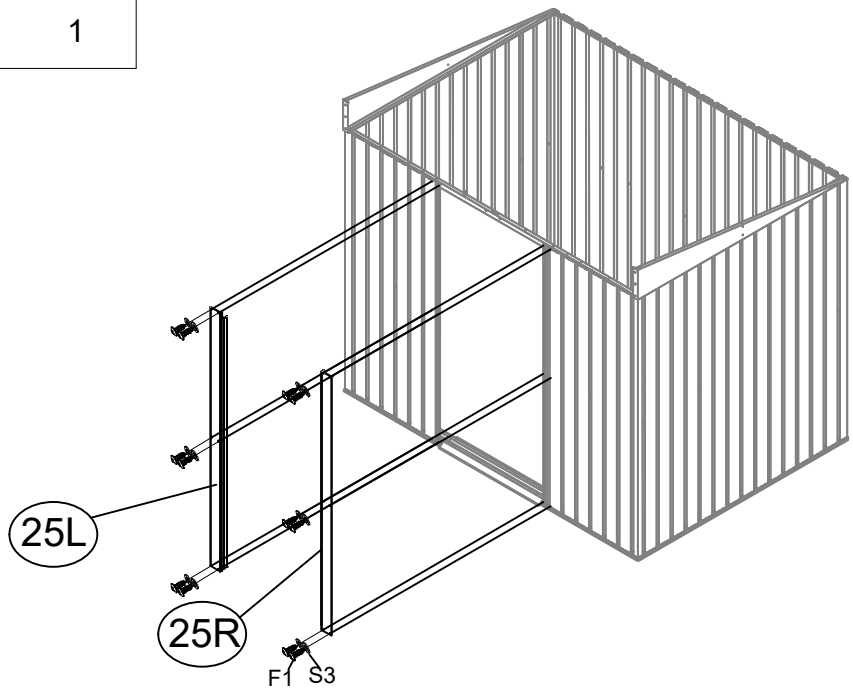

NO.	PART	Qty.
P1		7
P3		1

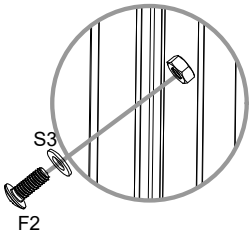

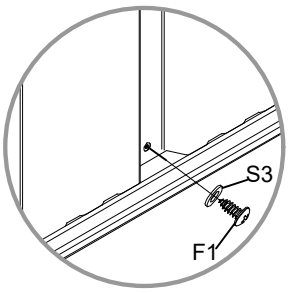

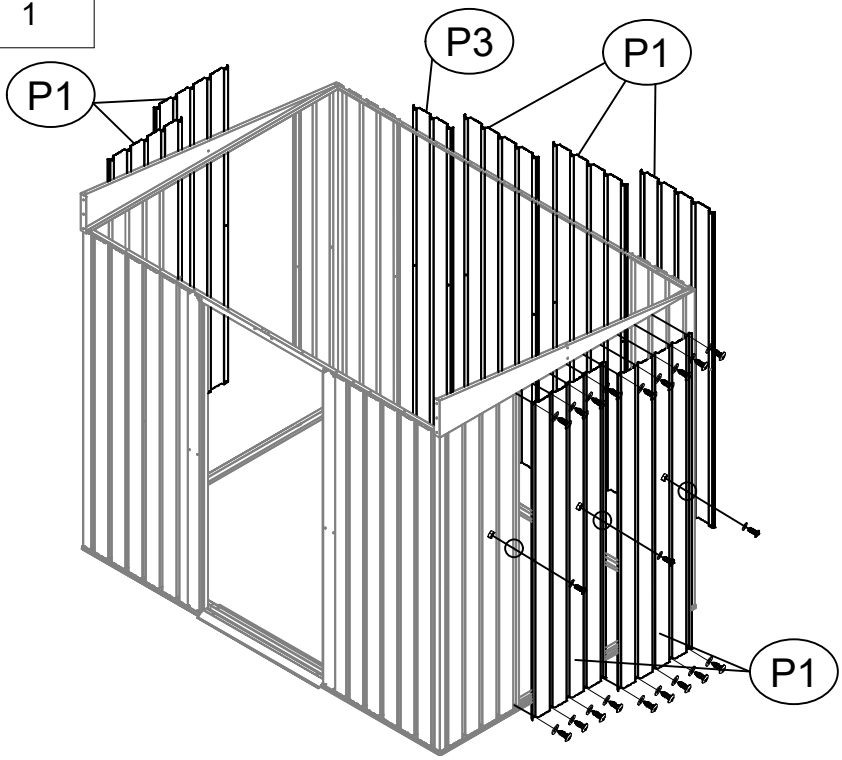

NO.	PART	Qty.
C1		1
C2		1

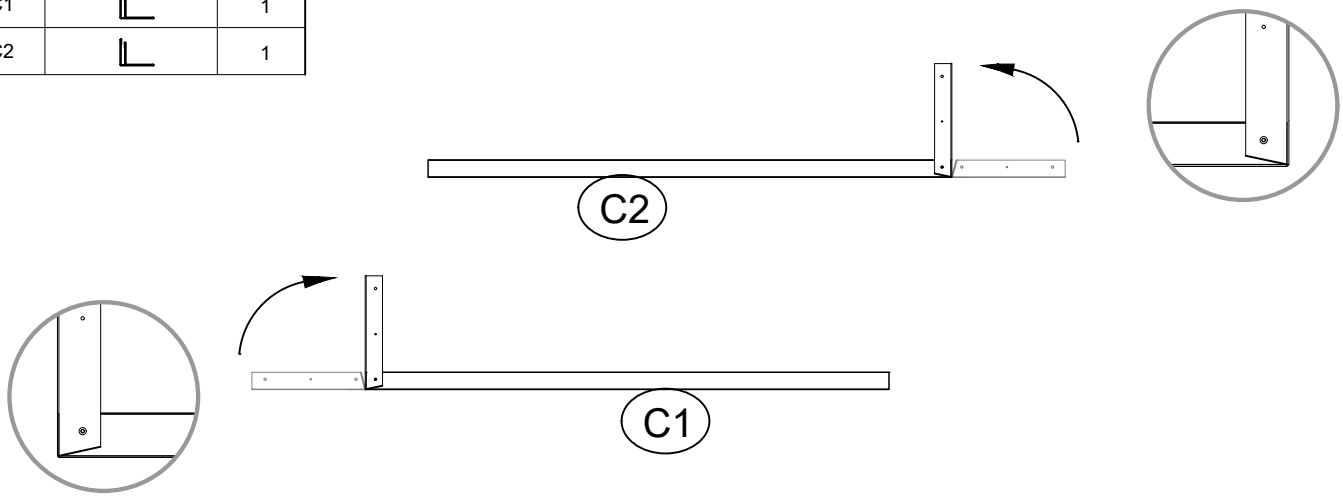

NO.	PART	Qty.
C5		1

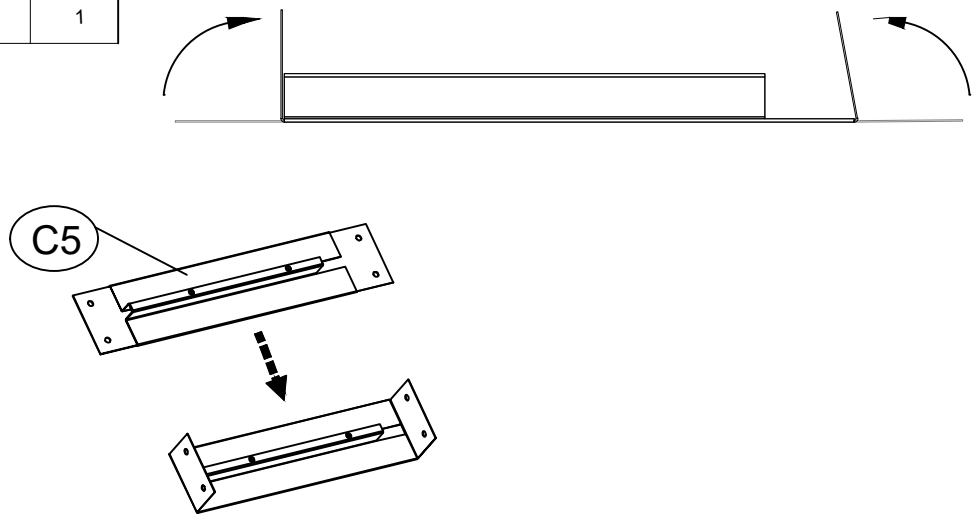

NO.	PART	Qty.
C3		1
C4		1

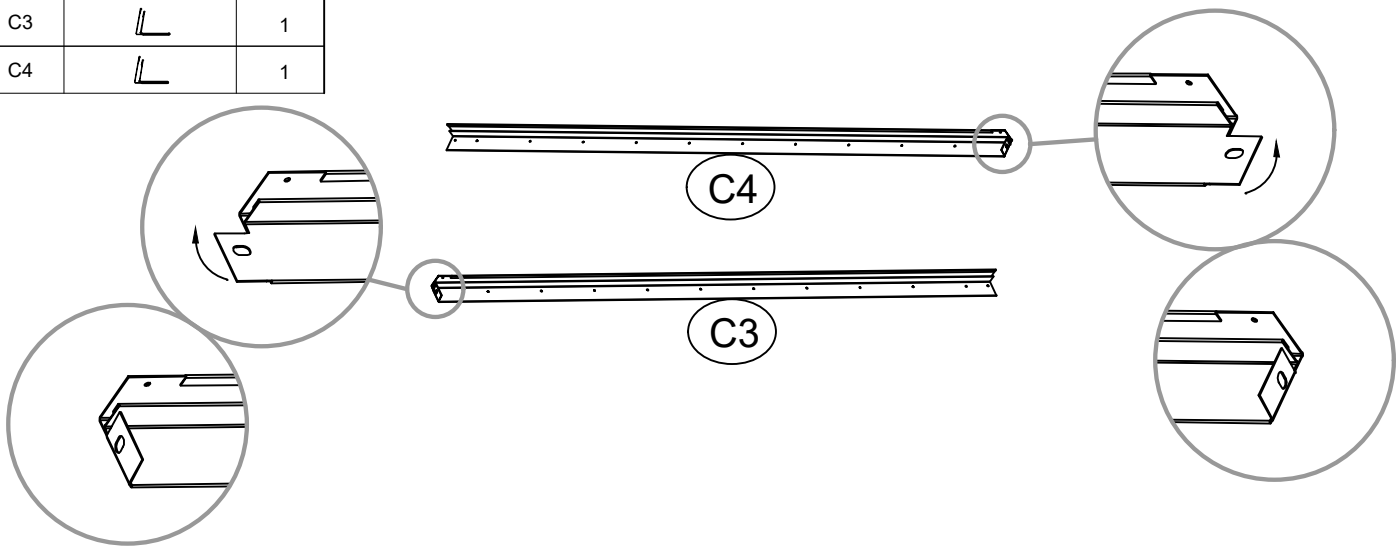

NO.	PART	Qty.
P0	▭	2

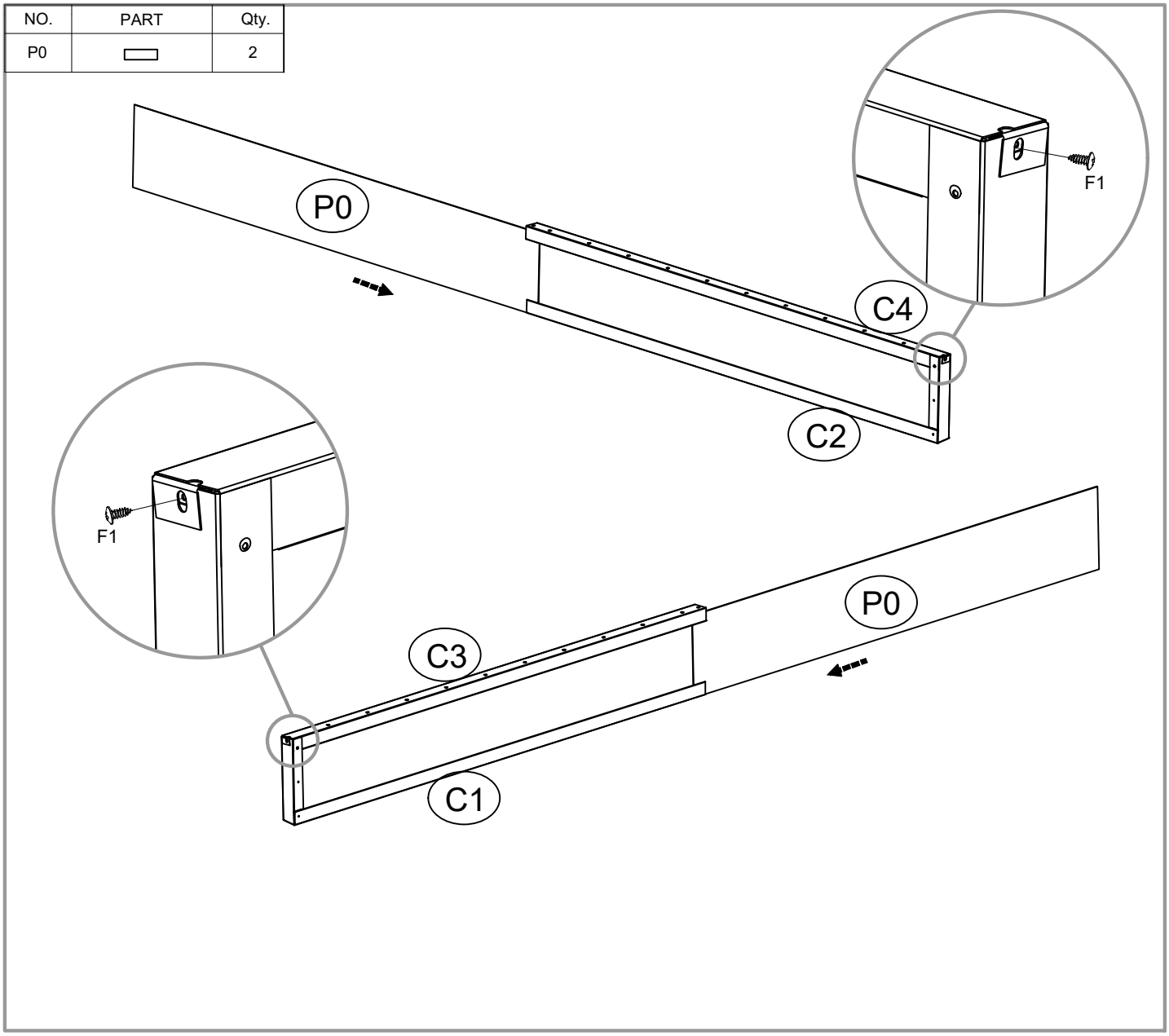

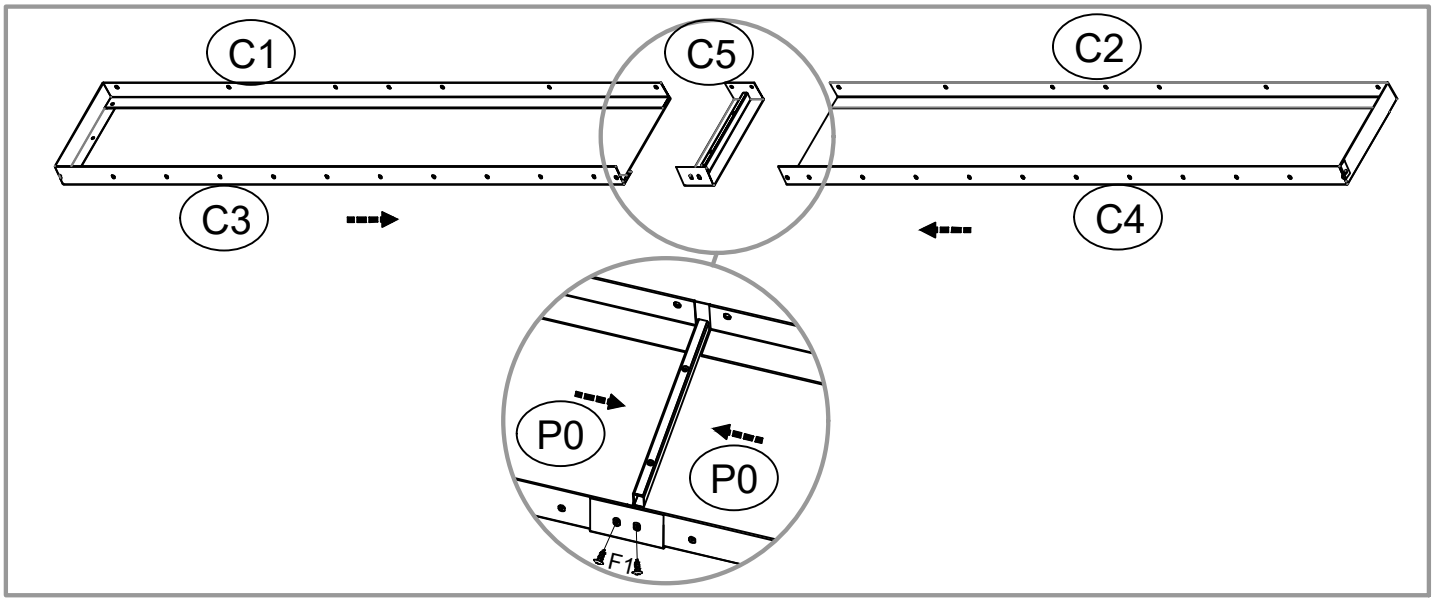

NO.	PART	Qty.
C6		1

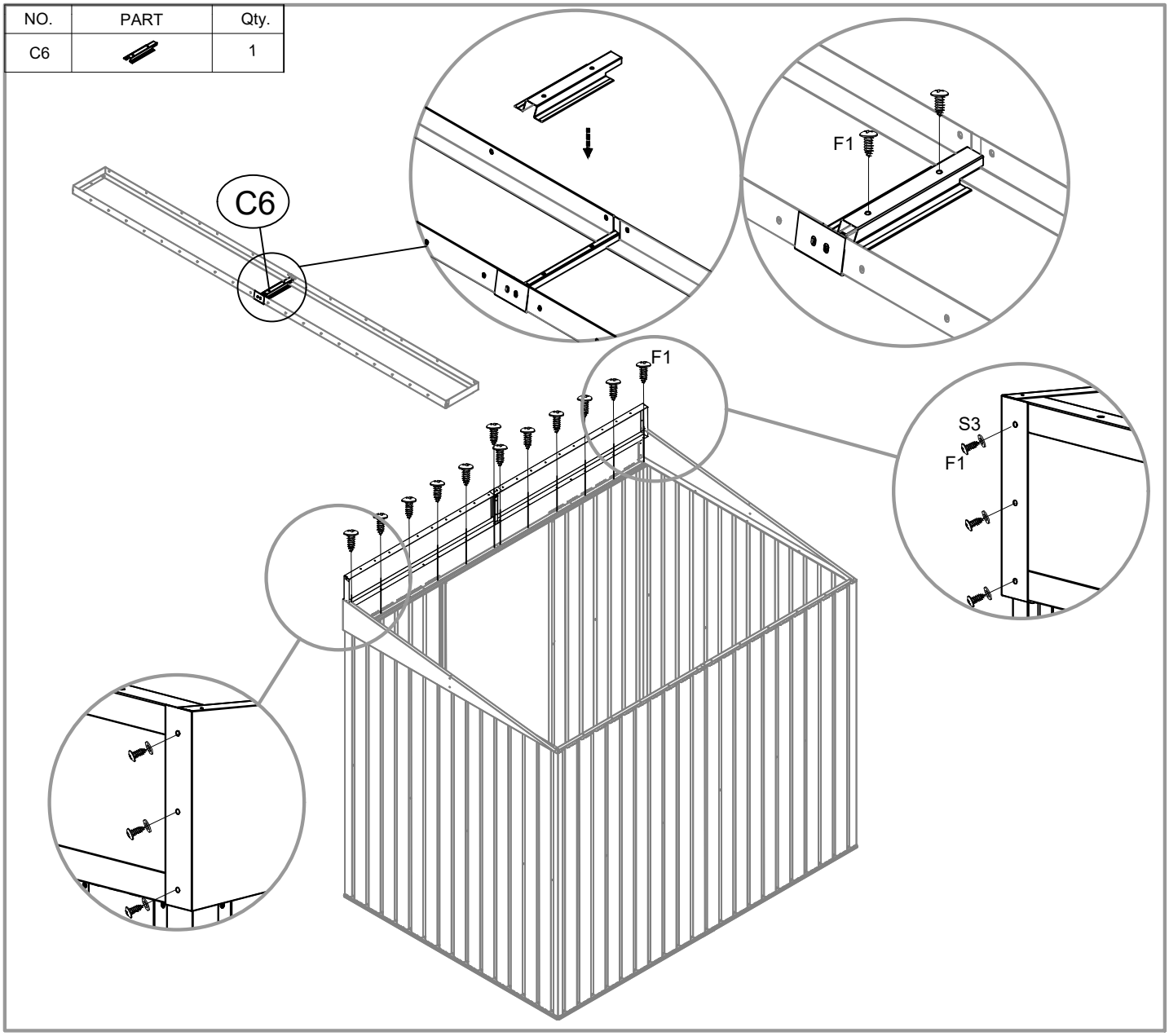

NO.	PART	Qty.
C7		2

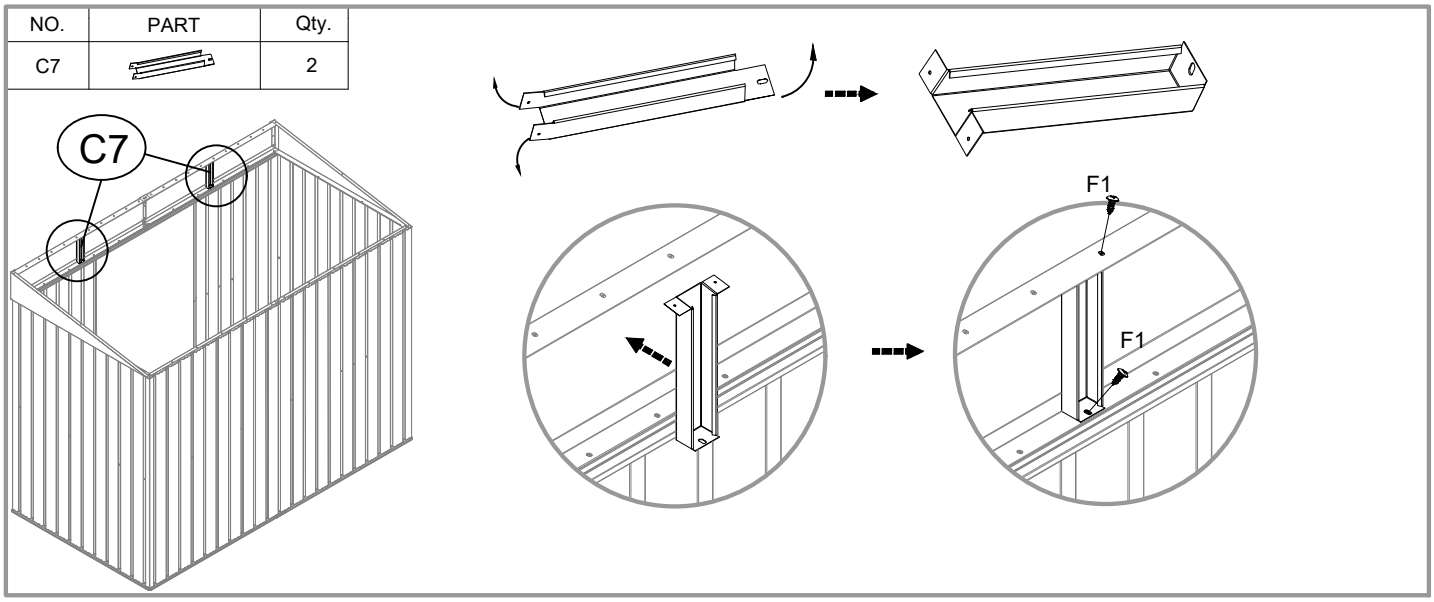

NO.	PART	Qty.
B1		2

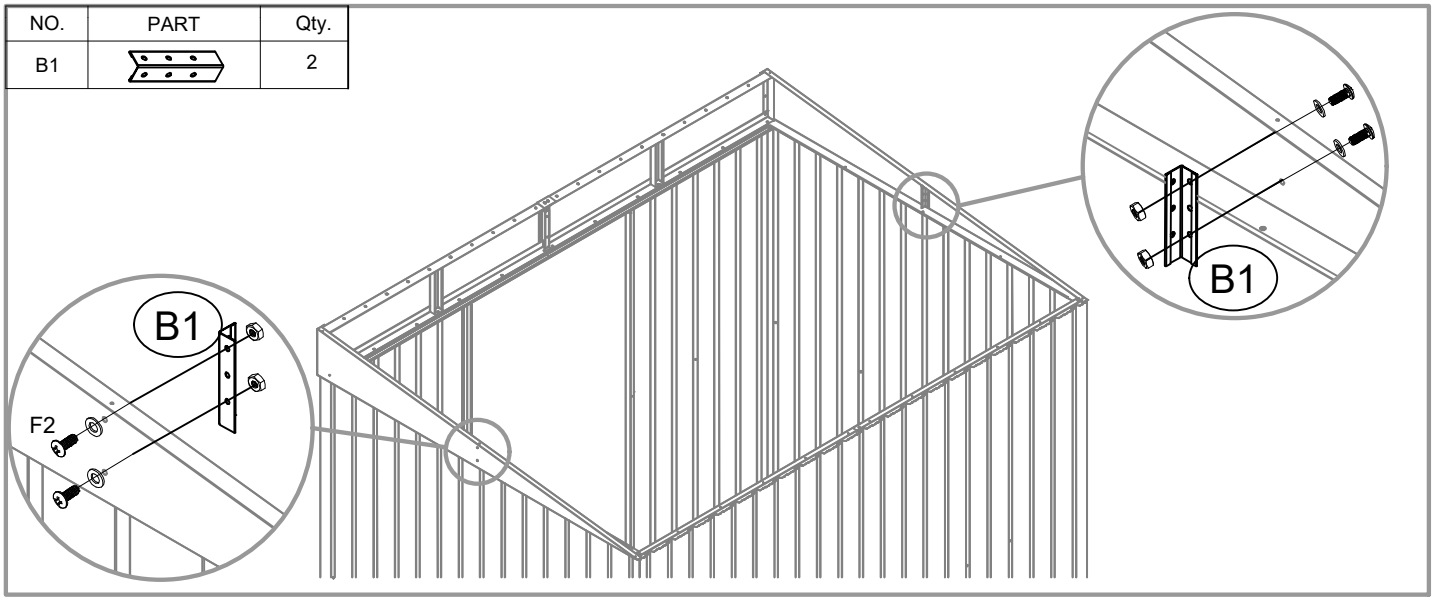

NO.	PART	Qty.
11-1		1
11-2		1

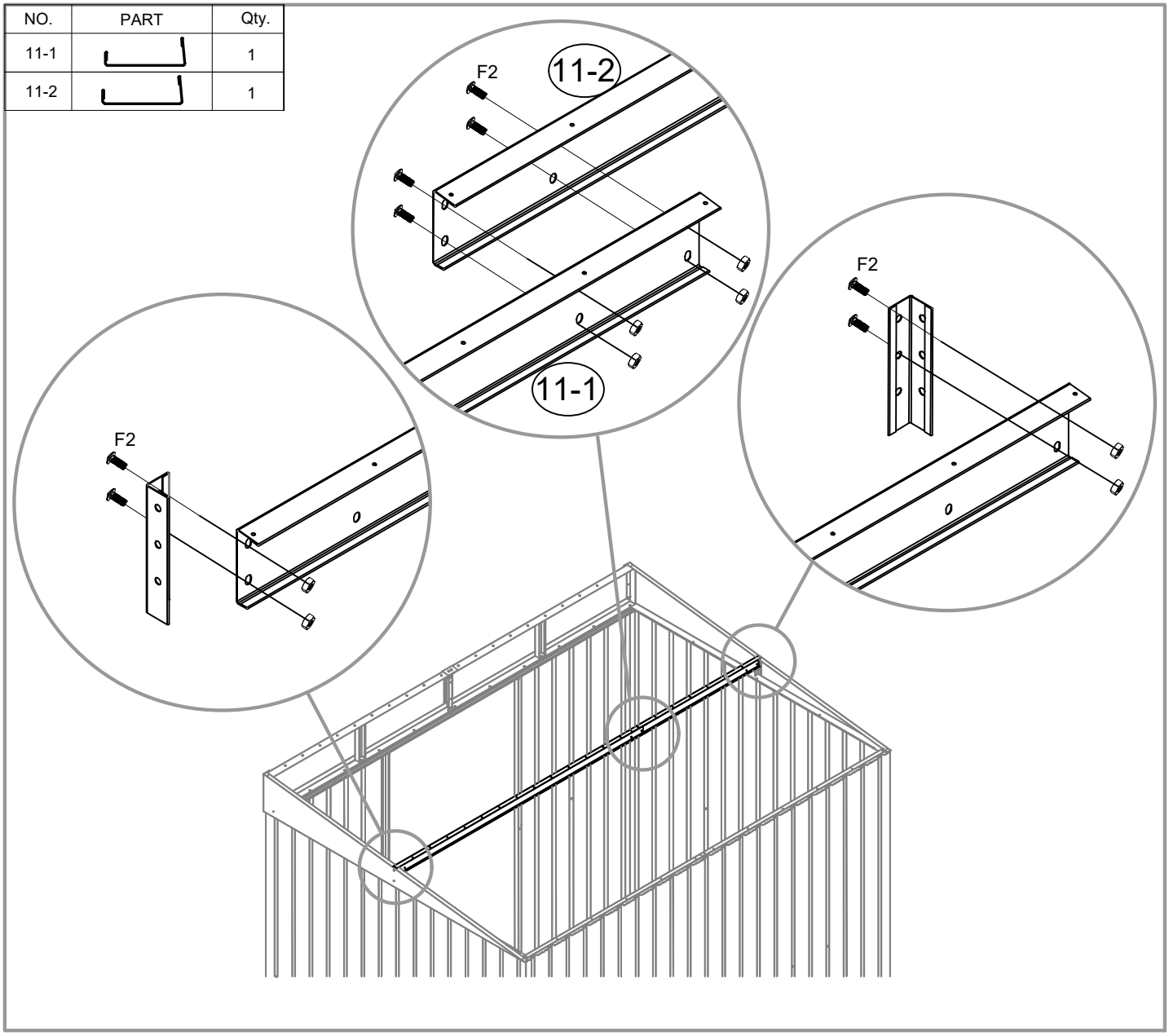

NO.	PART	Qty.
P4L		2
P4R		2
P5		2

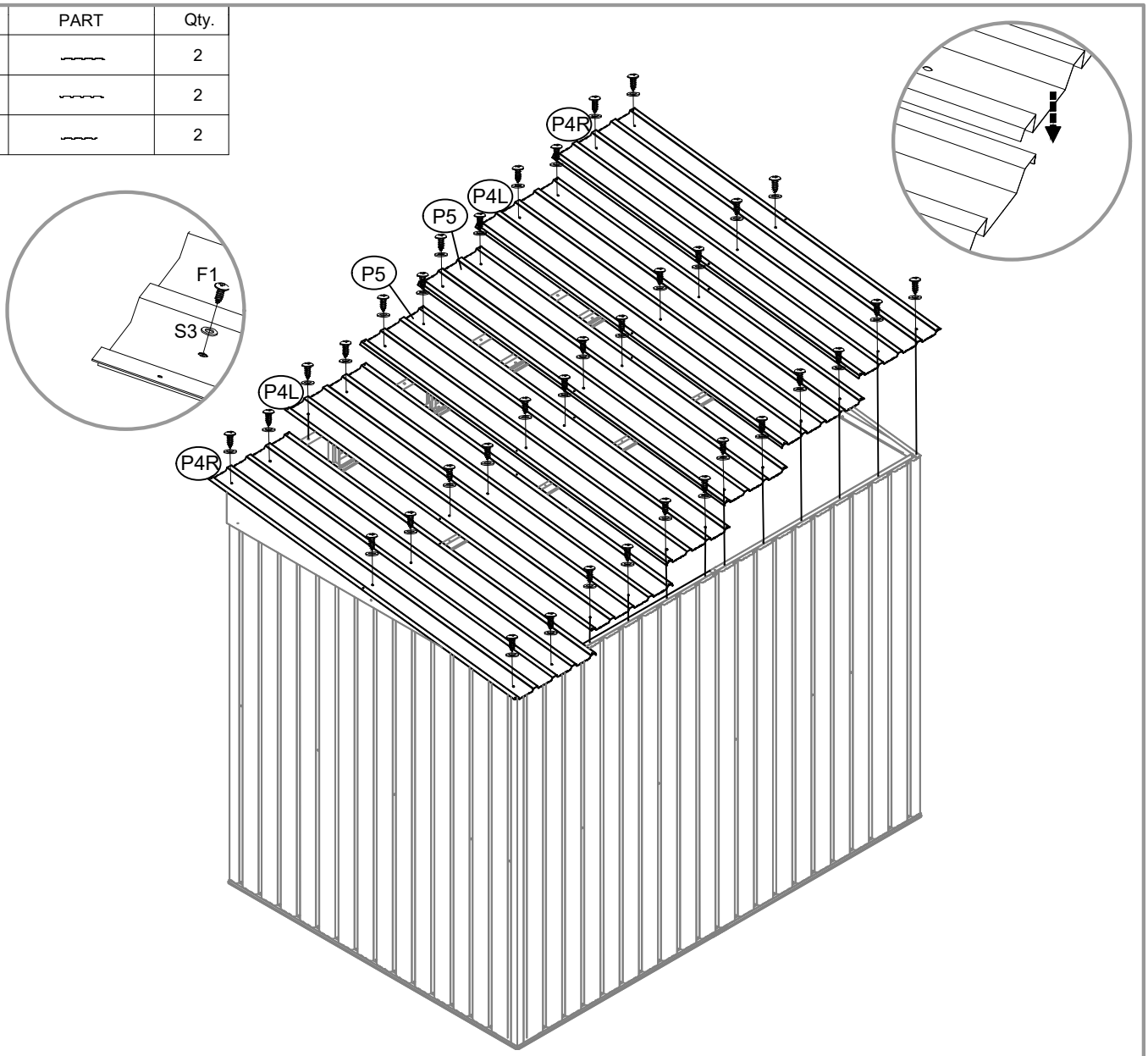

NO.	PART	Qty.
15		2
17L		2
17R		2
GC		4

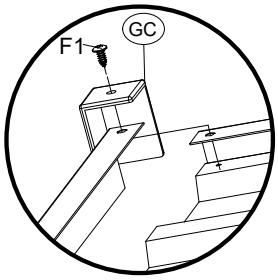

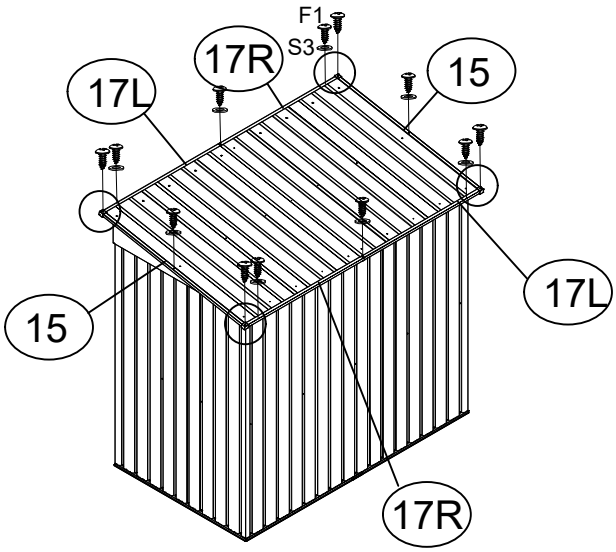

NO.	PART	Qty.
D1		1
D2		1
GB		2

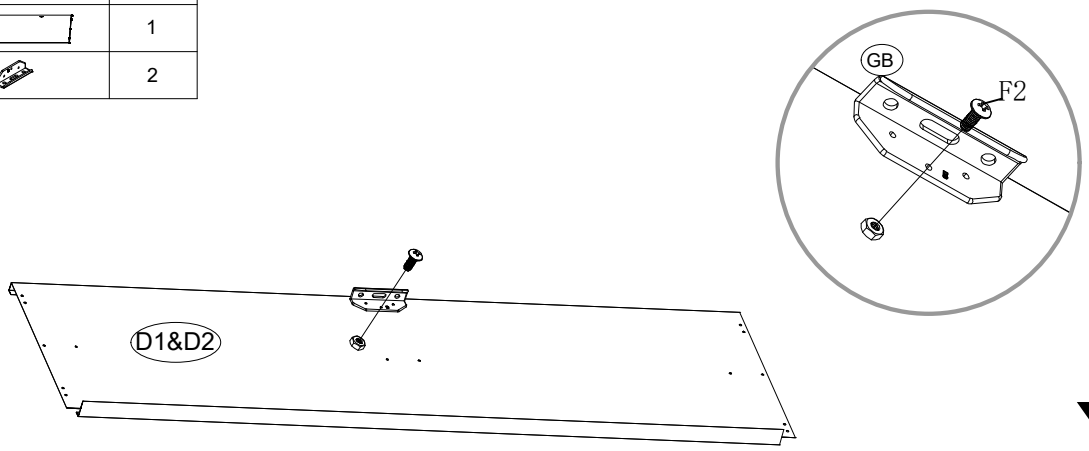

x2

NO.	PART	Qty.
20		6

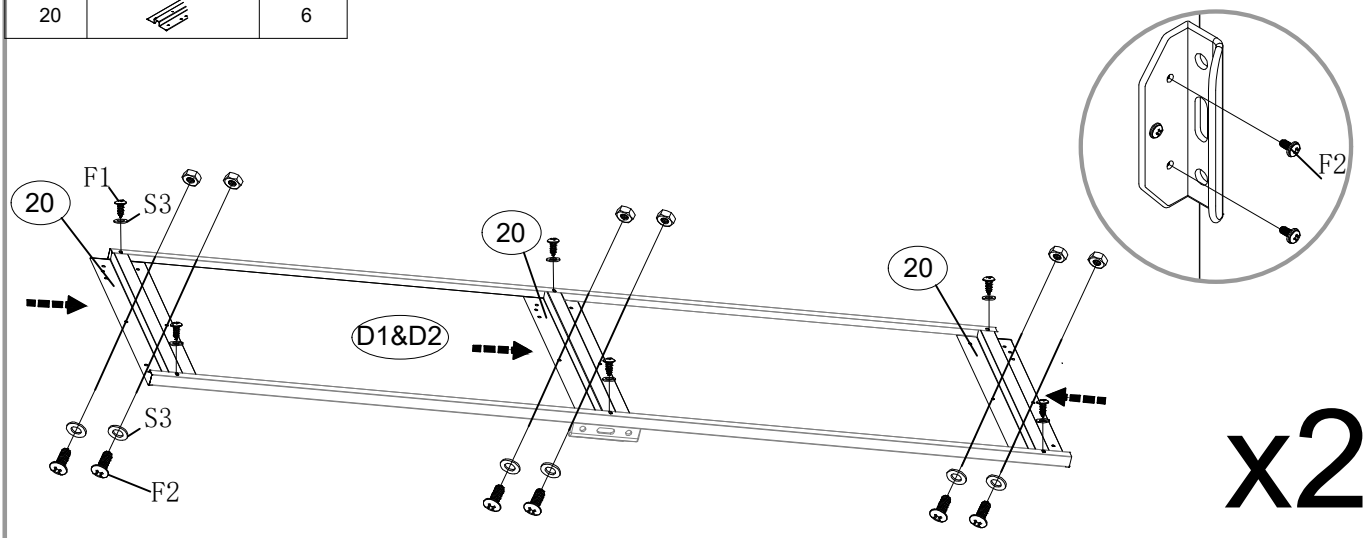

x2

NO.	PART	Qty.
GD		4

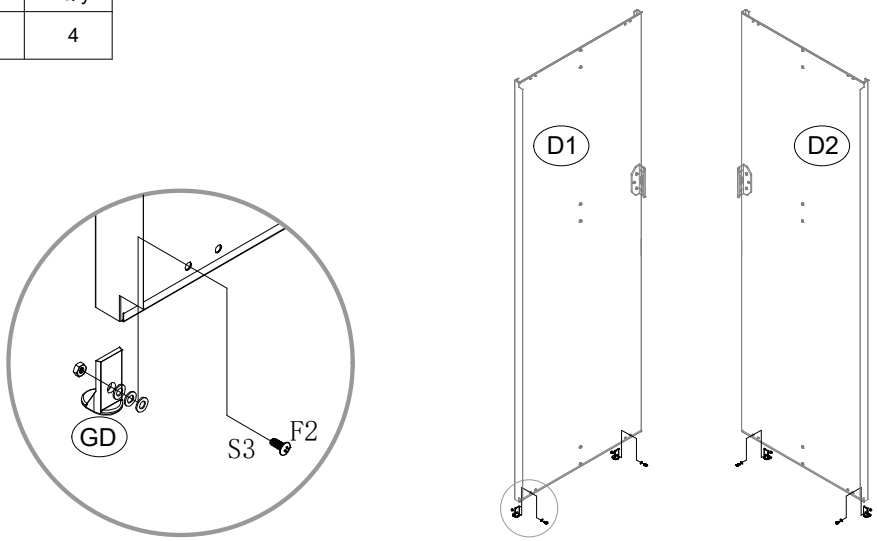

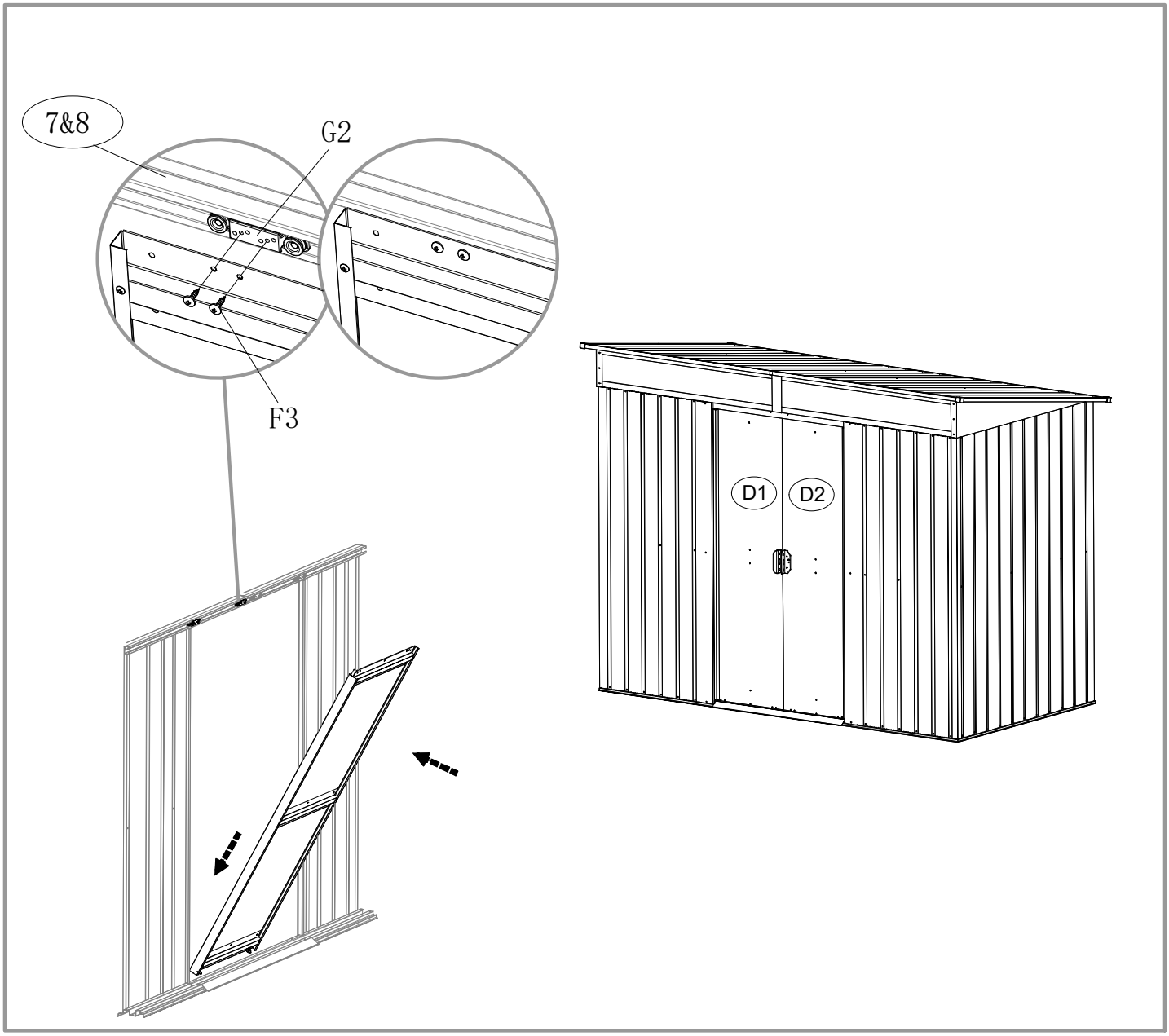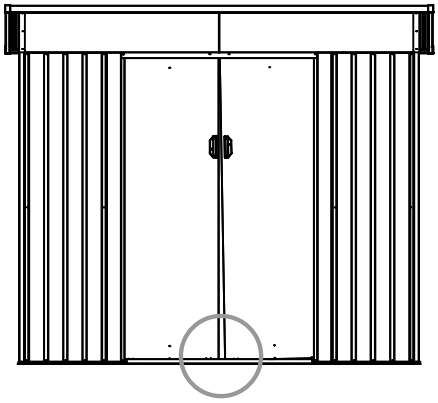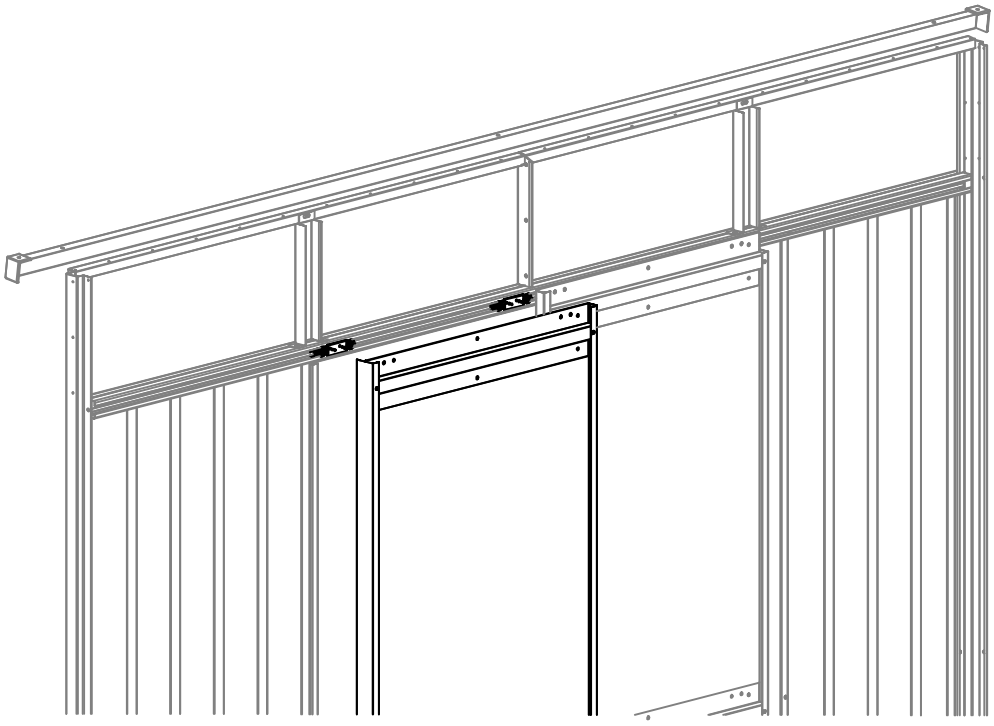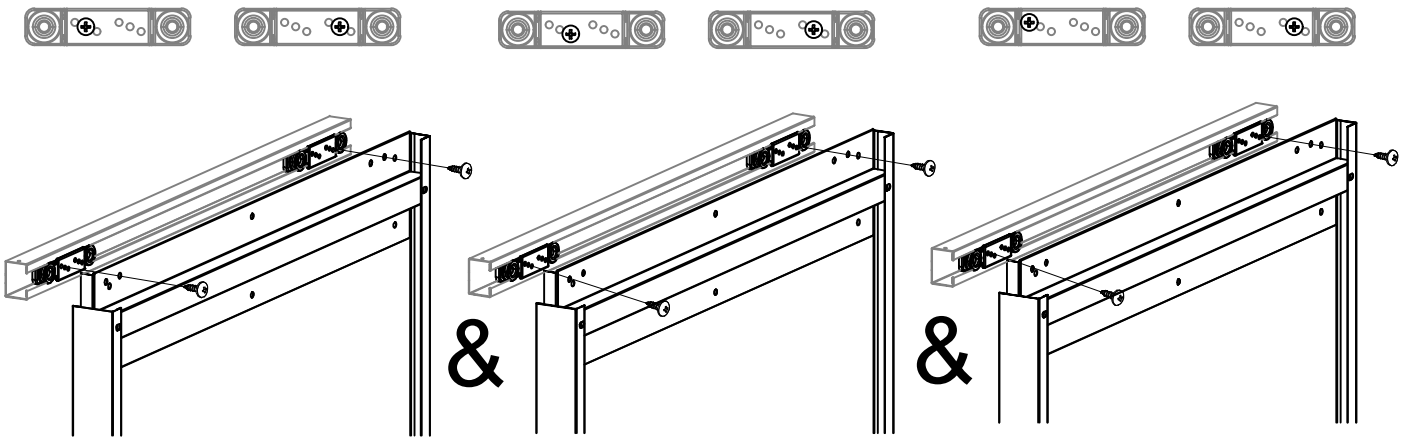
7&8
G2
F3
D1
D2